WACO Corp.

B-101, HAGYE-TECHNOTOWN, 10, NOWON-RO 15-GIL,
NOWON-GU, SEOUL, KOREA
TEL:82-2-948-0657 / FAX:82-2-948-2342
www.waco.co.kr

WACO Corp. Electrical Bidet

USER'S GUIDE

HDB-1500R

Preparation

Installation

Operation

Maintenance & Cleaning

This user's guide contains the product warranty certificate.

Be sure to read this user's guide carefully before use.

▪ 220V ~ 240V, 50Hz CE

WACO Corp.

THIS UNIT WAS MANUFACTURED FOR HOUSEHOLD USE ONLY.
READ ALL OPERATING INSTRUCTIONS BEFORE INSTALLATION.

Notes

1.This product should be installed according to this manual.
2.Please read this manual carefully and install properly.
3.Please save this manual and place an easily accesible location.
4.Do not attempt to service this appliance yourself. Doing so could void warranty.

CONTENTS

1. Safety Instruction 4
2. Product Characteristic 8
3. Designation of Each Component 9

4. Installation 11
5. Trial Operation 15
6. Disassembly of Product 16

7. How to Use the Product 18
8. User Setting Facilities 22

9. Maintenance & Cleaning 24
10. Before requesting repair 26
11. Product Specifications 27
12. Comparison Chart 28
13. Memo 29
14. Warranty Information 31

01.Safety Instruction

● **Each symbol refers to the followings:**

⚠ Warning	Risk of death or lethal damage when violating the instructions
⚠ Caution	Risk of injury or material damage when violating the instructions

● **Each pictorial indication means the followings:**

means prohibition

- Disassembly is not allowed
- Don't touch with wet hand
- Use of fire prohibited
- Don't spray water
- General prohibition

means obligation

- Obligatory Instruction
- Grounding Connection

⚠ Warning

Disassembly, modification or repair is not allowed.

▶ Risk of electric shock or fire.

Don't plug or touch the power cord with wet hands.

▶ Risk of electric shock.

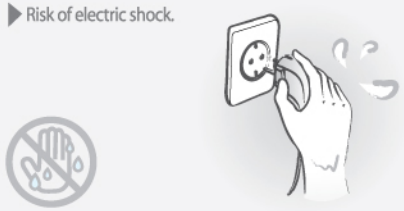

Don't spray water on the main body of product or power plug.

▶ Risk of electric shock or fire

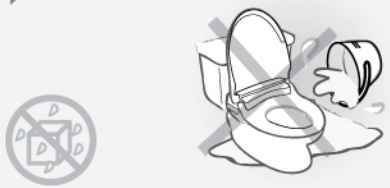

Don't use the damaged power cord or outlet.

▶ Risk of electric shock or fire

⚠ Warning

Don't fail to do grounding.

▶ Always use the outlet that encloses the earth electrode (Earth terminal mounting outlet-check if there is earth or not).

▶ In case there is no earth electrode, do grounding separately.

▶ When it is not grounded, it causes the failure and electric shock.

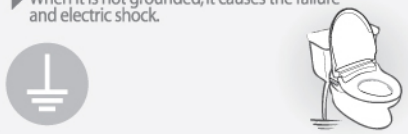

Insert the power plug correctly in 220~240V exclusive outlet.

▶ Risk of heat or fire.

Don't locate the cigarette or flammable materials near the product ; Don't throw the cigarette into the product.

Don't connect the product to the water pipe of industrial use.

▶ Risk of causing dermatitis of user.

Don's connect power to the product before its complete installation on the toilet.

When the power cord or plug is damaged, always inform the service center, and replace if required.

Don't block the hot air hole nor put any object or hand on the hole.

▶ Risk of burn or electric shock. (DIB-1300, 1500 only)

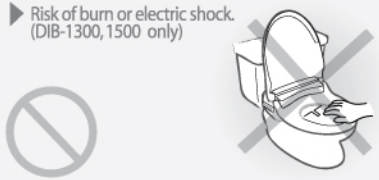

When removing the product from toilet, always release the power plug first.

▶ Risk of electric shock.

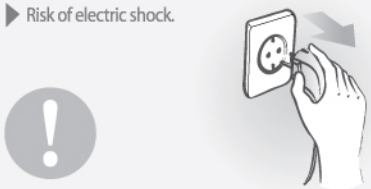

Preparation

01.Safety Instruction

⚠Caution

Don't stand on the product ; don't put heavy object on it.

▶ Risk of injury or damage to the product.

Don't force to close the cover of toilet.

▶ Risk of failure.

Don't force to lean against the cover of toilet.

▶ Risk of failure.

When cleaning, don't use toilet-use detergent, benzene, thinner, etc.

▶ Risk of damage to the product or crack.

Don't bend the connecting hose ; don't force to pull it out.

▶ It may cause stoppage of water supply or leakage.

Be cautious low temperature burn.

▶ When the skin has been in contact with a seat for a long time, it may cause low temperature burn. The seat temperature should be set on Low or off when the unit is used for children, elderly persons, persons who cannot control the temperature by themselves.

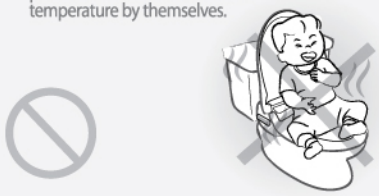

⚠Caution

When the product is not used an extended period of time, remove the power plug and drain the water out of the product tank.

▶ It may cause the water rotten and result the skin disease.

Don't use with the product out of order.

▶ When it is out of order, remove the plug from the outlet and inform the service center.

▶ Otherwise, it may cause fire or electric shock.

When installing, push it in until it sounds 'Click'.

▶ It may cause water leakage or mal-operation.

Don't place the removed product upside down.

▶ Risk of the product failure.

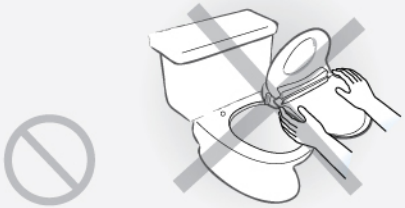

⚠Warnings

This appliance is not intended for use by persons (including children) with reduced physical, sensory or mental capabilities, or lack of experience and knowledge, unless they have been given supervision or instruction concerning use of the appliance by a person responsible for their safety.

Children should be supervised to ensure that they do not play with the appliance

02.Product Characteristic

WACO Corp. bidet has the following characteristics:

Continuous Warm Water Supply
Enjoy continuous warm water throughout the wash cycle.

Enema Wash
Soft but powerful water wash for added cleansing benefit.

Bubble Wash
Aerated water wash adds cleaning comfort.

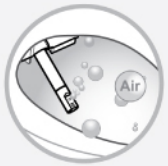

Massage
Nozzle moves back and forth for massage effect.

Pulse
Pulsating wash repeatedly cycles from weak to strong.

Deodorization Function
Semi-fundamental deodorizing filter provides odor-free during use.

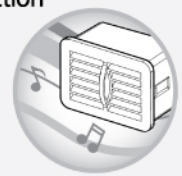

Energy Saving Function
It finds out the time frame when used frequently, realizing the maximum energy saving effect.

Child Settings
Specialized nozzle position and water pressure for children.

Remote Control Unit
Convenient wide LCD remote control provides easy user interface.

User Preset
User can preset and store the memory for control setting

03.Designation of Each Component

Main Body

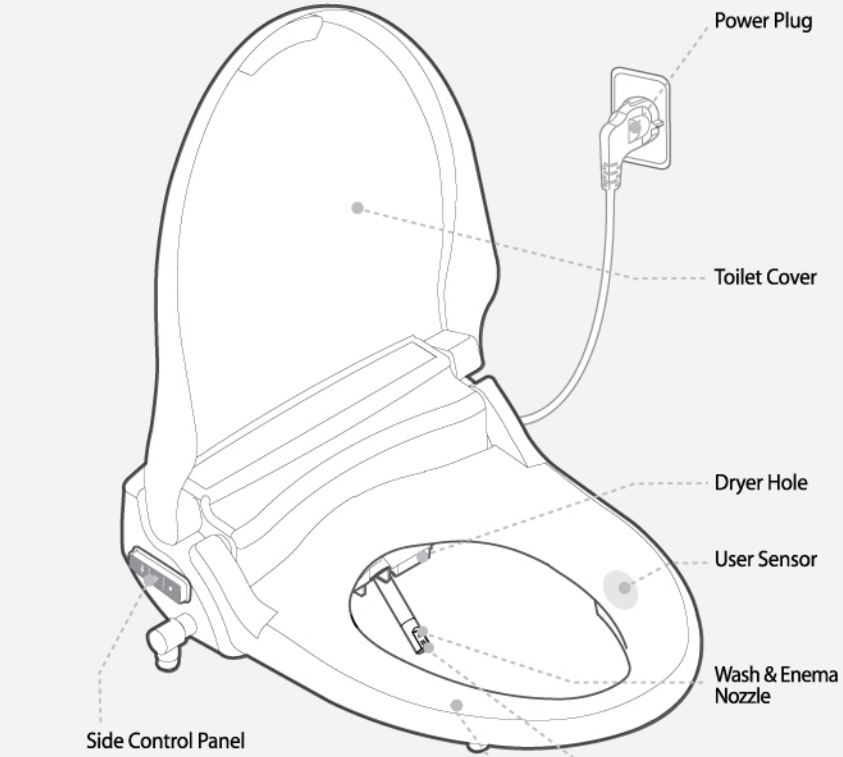

Toilet Seat type	Distance A
Round front type	16-9/16" - 17-5/16"(420 - 440mm)
Elongated type	17-23/32" - 18-1/2"(450 - 470mm)

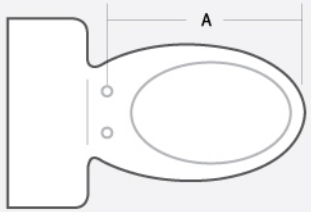

03. Designation of Each Component

Operation Panel

WASH
To run the wash function (2 minutes)

BIDET
To run the bidet function (2 minutes)

ENEMA WASH
To run the Enema wash (2 minutes)

DRY
To run the dry function (3 minutes)

PULSE
To run the Pulse function during Wash/Bidet/ Enema Wash. Water pressure is rhythmically changed from strong to weak.

MASSAGE
To run the Massage (oscillating)during Wash/Bidet. (Not in Enema wash mode) Nozzle moves back and forth automatically. Press it again to stop the function.

NOZZLE CONTROL
To control the nozzle position

POWER CONTROL
Water pressure and dry temp can be adjusted by pressing HI/LO.

STOP
To stop all functions.

CHILD
children safety mode.

USER PRESET
User can preset and store the memory for control setting

WATER TEMP
To adjust the water temp. by 4 steps (Room temp/ 34℃/36℃/38℃)

SEAT TEMP
To adjust the seat temp. by 4 steps (Room temp/ 34℃/38℃/42℃)

ENERGY SAVING
Automatic mode Learning energy saving mode Releasing energy saving mode

Accessories

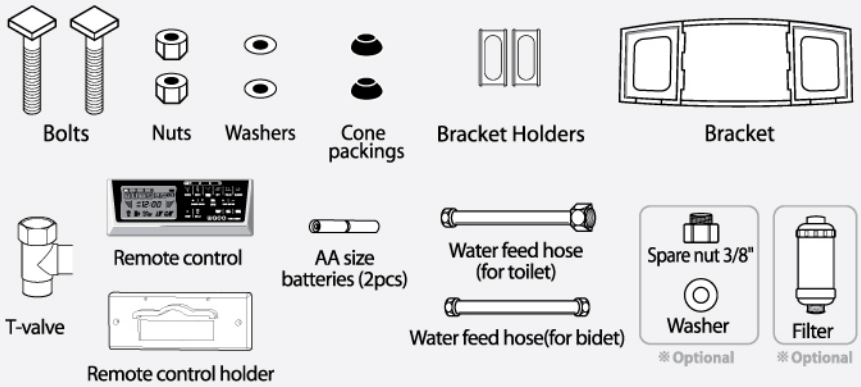

04. Installation

Order of Installation

1 Remove the seat from the existing toilet body.

- Release the nuts, and then remove the seat and cover from it.
- Keep the removed seat, cover and nuts well in a proper place.

2 Close the water feed valve by turning it clockwise, and then drain the toilet water tank out.

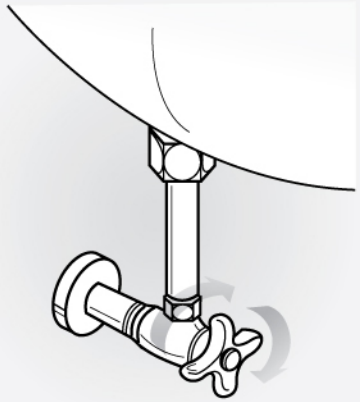

3 Remove the water feed pipe and then install T-valve.

- Keep the removed water feed pipe well in a proper place. It may be useful when moving house to other place later.

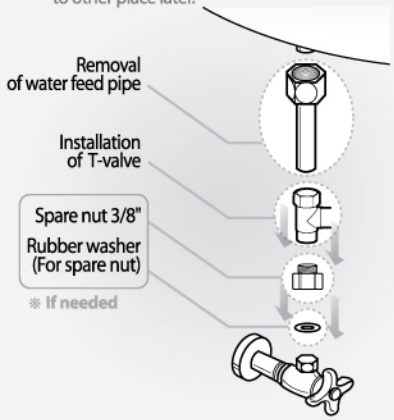

4 Connect the toilet-use hose.

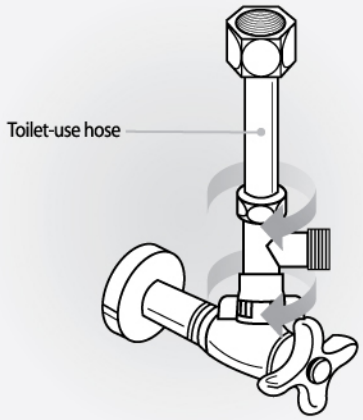

Installation

5 Fix the bracket onto the toilet first.

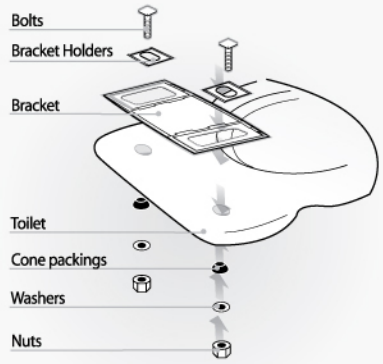

▶ Adjust the seat and the front part of toilet back and forth so that they can correspond with before fastening the nuts.

6 Push the main body toward the bracket completely.

▶ Push it in until it sounds 'click'.

▶ When the product is not installed well, it may cause leakage.

7 After install the filter onto the T-valve, connect the bidet-use hose to the bidet body.

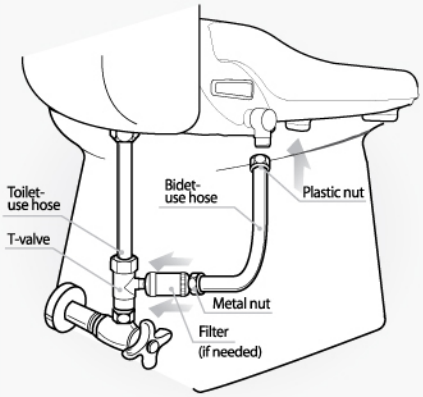

8 Insert the deodorizing cartridge into the bidet body.

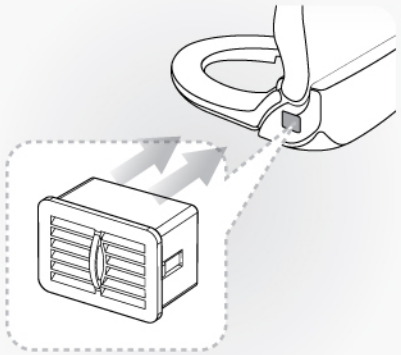

Remote control installation & batteries insertion

1 Remove the adhesive protection to attach the remote control bracket.

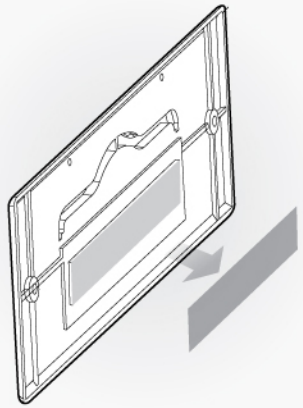

2 Clean the place thoroughly to attach the bracket.

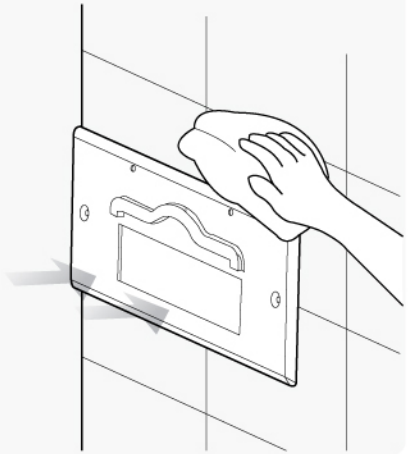

3 Remove the back cover and place supplied batteries with correct direction.
Close the back cover.

※ **Caution**
Failure to install the batteries properly could cause damage or faillure of the remote control unit.

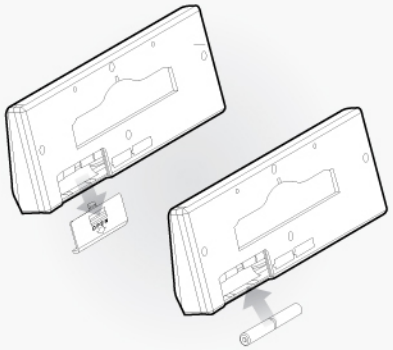

4 Place the remote control in the bracket with correct direction.
When placing it, take care to hang it on the bracket completely. Failure of placing could cause the remote control falling down.

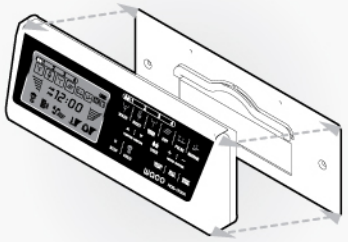

5 When the batteries have reached the end of service life, the battery lamp will blink. Replace the batteries with new ones, AA size X 2pcs.

※ **Caution**
Do not use old and new batteries together.
This could cause damage or failure of the remote control.

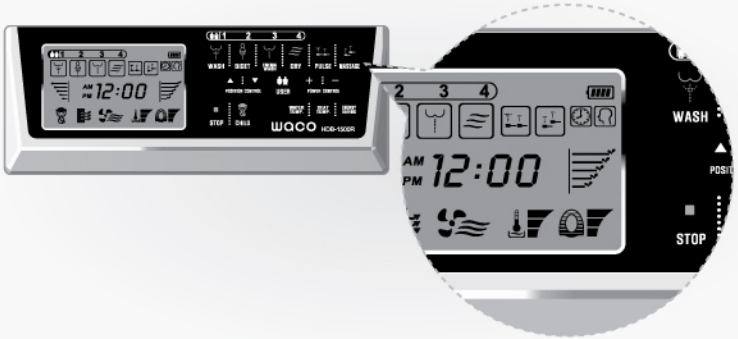

6 If the unit does not work after replacing the batteries, unplug and wait for 3 seconds. Plug in again, and the unit will be ready for use.

※ After replacing the batteries, ID of the unit will be initialized as "00" (factory initialization ID), and its ID will be equalized ID of the remote control that reaches the unit first.
This ID assigning function will be needed to prevent signal interruption if more than 2 units are used at one place. In case of using one unit only, user can use the unit accordingly without setting.

※ If you want to change the ID, please refer to the page 22. for "Remote Control ID Setting"

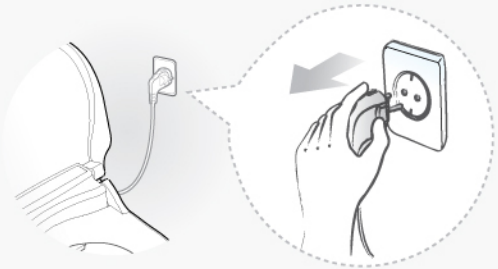

Order of Trial Operation

1 Open the water feed valve by turning it anti-clockwise.

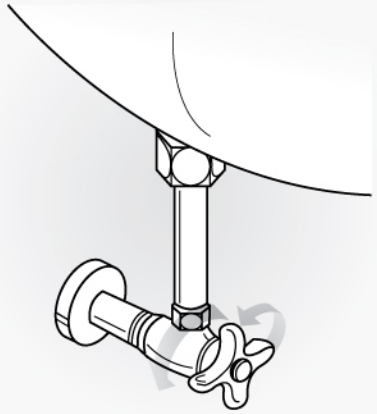

2 Be sure of no leakage around the hose connection.

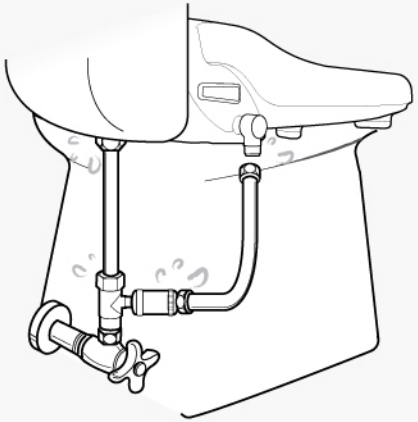

3 Be sure that logo light on the top tunrs on and nozzle comes and restracts when powered on.

▶ Don't plug the power cord with wet hands.
Risk of electric shock.

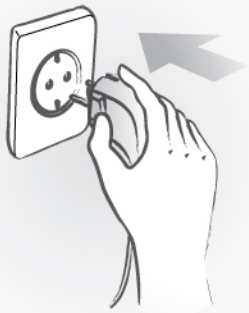

4 Put the hand on the user sensor part of the seat, check if lights of water pressure gradually turns on, and water comes out from drain hole for 1~2 seconds.

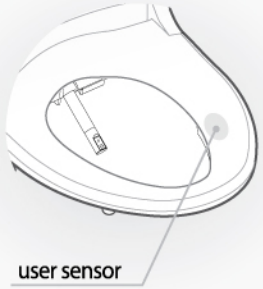

06.Disassembly of Product

Order of Disassembly

1 Remove the power plug from the outlet.

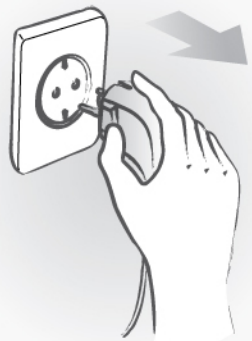

2 Close the water feed valve by turning it clockwise, completely drain out the toilet water tank, release the nuts at bidet body of the bidet hose, and then remove them from main body.

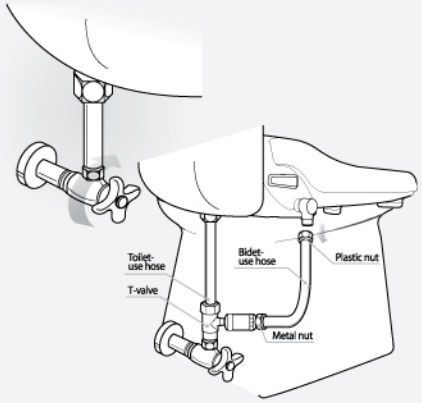

3 Press the button on the side of bidet, completely drain the water out of the of the main body. While keep on pressing the button, pull the main body forward, and then remove it from the toilet.

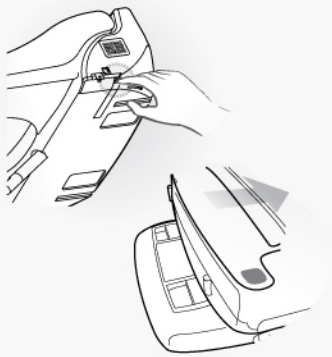

4 Release the nuts, and then remove the brackets from the toilet.

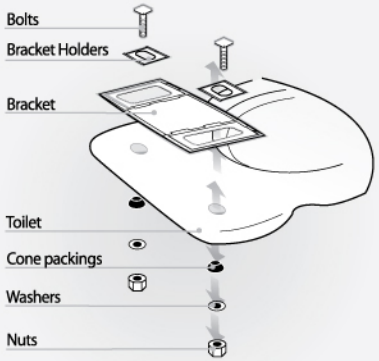

5 Remove bidet hose, toilet-use hose and T-valve.

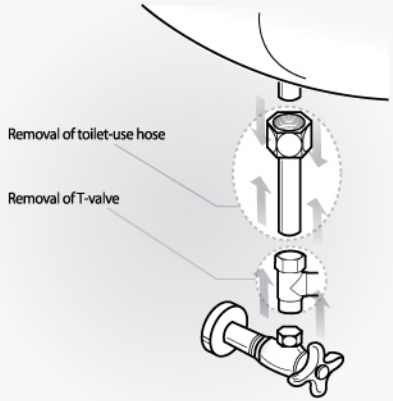

6 Connect the water feed pipe that was removed when the bidet was installed.

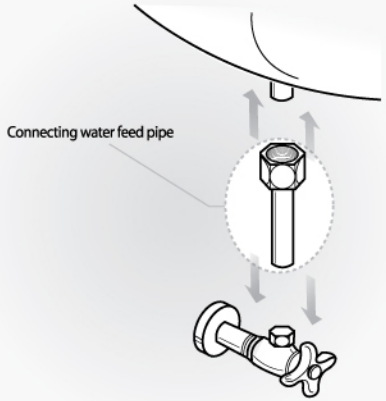

7 Open the water feed valve by turning it anti-clockwise. Be sure of no leakage around the water feed connection.

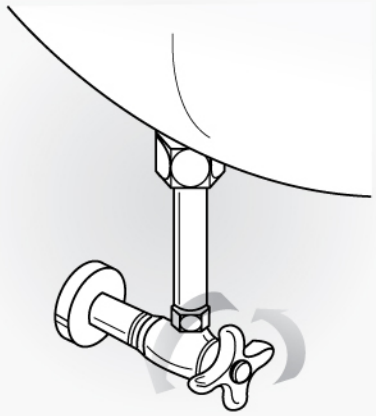

8 Attach to the toilet the seat and cover that were removed when the bidet was installed.

07.How to Use the Product

Basic Operation Method

1 Sit on the toilet seat.

- Deodorization function starts automatically.
- When sitting on the toilet seat, be seated so the user sensor to be occupied. (Otherwise, it may not normally operate due to detection problem)

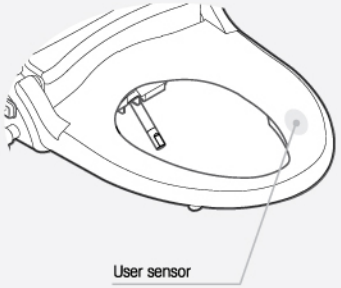

2 Press WASH, BIDET, ENEMA WASH buttons.

- Selected function can be used as desired. (When selecting Enema Wash function, MASSAGE function cannot be used.) (When selecting Child function, Enema Wash function may not operate)
- WACO's specialized water spray in Enema Wash function enters into the rectum, and then help relieve constipation and fecal stasis.

3 Press the DRY Button.

- Hot air indicator lamp will lights on. (5 levels available)
- Selected function may be used for three (3) minutes.
- Drying effect will be improved if you wipe the moisture lightly before operating the drying function.

4 Press the STOP Button.

- Selected functions stop.
- Press "STOP" on the side control panel for 3 seconds to turn off the unit.

5 MASSAGE Wash

- When pressing the MASSAGE button during the operation of WASH and BIDET, nozzle location will be changed back and forth to wash the wider range.
- When pressing the CHILD button during the operation of MASSAGE, the moving distance can be adjusted within 5 steps.
- MASSAGE function will not operate during the operation of ENEMA WASH.

6 PULSE Wash

- When the pressing PULSE button during the operation of WASH, BIDET and ENEMA WASH, water pressure will repeat HIGH/LOW level for smooth pulsating wash.

7 Water Pressure Control

- Pressing HIGH/LOW button enables the control of water pressure.
- When any foreign material blocks the water pipe filter, it may cause the low water pressure. Regularly check it for its stable use.

8 Nozzle Position Control

- During the operation of WASH, BIDET and ENEMA WASH, Nozzle position can be controlled by pressing FR/BK.

1. After enema wash, eliminate the water from your rectum completely.
2. If the concentrated water stream is not pointing at the center of posterior, it may bring some pain or water splashes abnormally.
3. If the anal disease patient uses enema function, it may bring some pain or bleeding for the first several times.
4. Excessive use of enema wash may aggravate constipation.

07.How to Use the Product

Basic Operation Method

9 CHILD Function

- When used by a child, press the CHILD button first (CHILD function lamp behind the operation panel will light on), use the WASH and BIDET function, and then nozzle will move forward and the water pressure will be weakened.
- Nozzle position and water pressure can be adjusted within 5 steps as desired.
- When selecting CHILD function,control range of seat temperature will be dropped to the room temperature, 93°F/96°F/100°F (34℃/36℃/38℃)
- Enema Wash function will not operate during the operation of CHILD function.

10 Seat Temperature Control

- When pressing the SEAT TEMP. CONTROL button, the temperature of seat can be controlled within the range of room temperature, 93°F/100°F/107°F (34℃/38℃/42℃)
- If the seat temperature reaches 34℃ or more, the seat temperature indicator turns in RED. If not(under 34℃), it remains in BLUE.

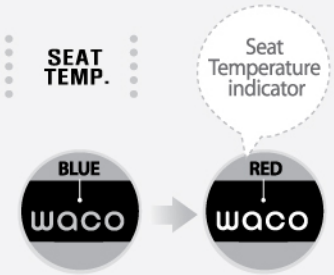

11 WATER TEMP CONTROL

- When pressing the WATER TEMP. CONTROL button, the temperature of water can be controlled within the range of room temperature, 93°F/96°F/100°F (34℃/36℃/38℃)

12 ENERGY SAVING Function

- Automatic Energy Saving Function
  - # When pressing the button once, it enters into automatic energy saving mode
  - # Seat temperature will be kept at 89°F(32℃).
  - # When sitting on the seat to use bidet, it turns to the pre-designated temperature; When getting out of the seat, it returns to the automatic energy saving mode.
- Learn Energy Saving Function
  - # When pressing the button twice, it enters into the learn energy saving mode.
  - # Learn energy saving enables MICOM to detect the time frame used by the users. It release the energy saving function at the higher-frequency time frame to set the temperature of seat at the pre-designated level, while setting it at 89°F(32℃) when the using frequency is lower, enabling the excellent energy saving effect.
  - # When using it at the lower frequency time frame, the preset temperature will increase during the time the user sits on the seat.
- When pressing the button three times, the energy saving mode will be released.

✱ This product adopts the rapid water-heating method, and therefore doesn't consume the unnecessary power to operate the heater for the purpose of keeping the water temperature. It means its power consumption is far less than the bidet of other suppliers.

13 Deodorizing function

- When sitting on the seat, automatically the deodorizing function starts.
- Speed of deodorizing fan can be controlled. (refer to the User setting facilities, P.22)
- After the usage of bidet, the deodorizing function will operate for one (1) minute.

14 Nozzle Cleaning

- While not sitting on the seat, and pressing the WASH button on the side control panel for three seconds the nozzle will move forward at it's maximum distance so that the user can clean it easily (It will return after 2 minutes)
- When pressing STOP button, the nozzle will return and operate self-cleaning operation.

15 User Preset

- Initial nozzle position, water pressure, dry/water/seat temperature can bepreset and stored for 4 users.

 # Presetting

1) Adjust nozzle position, water pressure, dry/water/seat temperature for your comport.

2) Press "User preset" for 3 seconds, and numbers 1,2,3,4 will blink. (occupied number(s) will not blink)

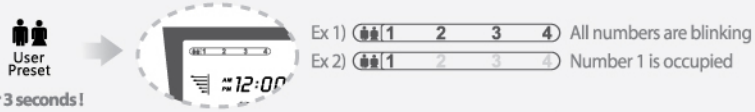

3) Each Wash /Bidet/Enema/Dry replaces 1/2/3/4 in User preset mode. Press the number for storing the memory (previous memory will be deleted if new memory stored)

4) Press "User Preset" again to store the memory and numbers and icon of user preset will be disappeared.

 # Using User preset

1) To use User Preset Function, press "User prest" and one of numbers consecutively. All settings will be set as it is stored before.

Press the number to call up the memory

2) After calling up the preset, use funtion(s) (Wash, Bidet, Enema, Dry).
3) To release the user preset function, press "User Preset" again.

Operation

08. User Setting Facilities

8-1. User setting with the remote control

● : Seat Switch 'Off' Status ○ : Seat Switch 'On' Status ◐ : Regardless of On/Off

No	Function	Seat Status	Switch Operation	Description	Initial Status
1	Time setting	◐	Stop / Child Press both "STOP" and "CHIILD" button for 3 seconds	AM PM 12:00 If the numbers blink, time setting is available.	AM 12:00
			▲ ⋮ ▼ POSITION CONTROL Change the mode (hour/minute) by pressing "Nozzle position"		
			+ ⋮ − POWER CONTROL Set the time by pressing "Power control"		
	Release the time setting mode		Stop Press "STOP" to finish the time setting		
2	Selecting the speed of deodorizing fan	◐	Stop / Energy saving While pressing the "STOP", press "ENERGY SAVING" for longer than 3 sec.	Stop + Energy saving / Fan speed: Occupied / Unoccupied / Display on LCD Default: High / High 3 sec: Off / Off 5sec: Low / Low 7 sec: Low / High 9 sec: High / High	High speed in occupied mode. High speed in unoccupied mode.
3	Remote control ID setting	◐	Massage Press "MASSAGE" for longer than 5 sec.	1d 00 ID can be chosen from 00 ~ 99. If main unit is powered off and on again, ID of main unit will be reset as 00. Before use, synchronize the IDs of main unit and remote control. Default ID is 00.	1d 00
			+ ⋮ − Power ctrl / Stop Change the ID by pressing "+" or "-", and press "STOP" to set the ID		
	Remote control ID change	◐	If batteries of remote control changed, set the ID again as it is shown above.	If batteries changed or ID changed (not 00), plug out the main unit for longer than 3 sec and plug in again. Main unit ID will be synchronized with ID of remote control automatically.	

Tip. If washing time is set at 3 minutes or longer, sitz bathing will be possible.

8-2. Extra functions with side contol panel

● : Seat Switch 'Off' Status ○ : Seat Switch 'On' Status ◐ : Regardless of On/Off

No	Function	Seat Status	Switch Operation	Description
1	Nozzle cleaning	●	Press "WASH" for longer than 3 sec.	Nozzle will move forward for cleaning.
			Press "STOP"	Nozzle will retract and clean itself.
2	Power off	●	Press "STOP" for 3 sec.	Press one of "STOP", "WASH", or "BIDET" to power on.
3	Initialization	●	Press "STOP" for longer than 5 sec.	All setting will be initialized.

waco Corp.

Operation

09.Maintenance & Cleaning

Cleaning of Water pipe filter

1. Close the water feed valve by turning it clockwise.
2. Disconnect the water supply hose. Take the screen filter out and clean it with soft brush. (e.g. toothbrush)
3. After cleaning, place it back. Then connect the water supply hose.
4. Open the water feed valve by turning it anti-clockwise.

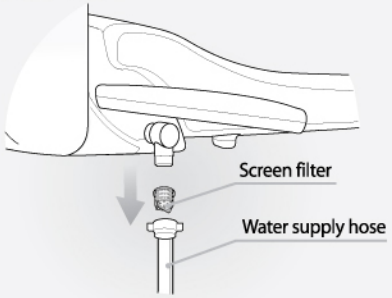

Cleaning of Nozzle

1. Press the WASH button for 3 seconds, and then the nozzle will move forward and stop (for 2 minutes)
2. Clean the nozzle with a unused toothbrush, etc., and press the STOP button, then it will return to the original place for self cleaning.

Cleaning of Bidet Body

1. Exterior surface of bidet is made of plastic material, which may be damaged by scrubber, chemicals, etc.
2. Wipe the surface with a soft cloth wet and squeezed completely. Don't spray water directly onto the surface with the bath-use shower device.
3. Clean the body after removing the power plug from the outlet. Be sure no water splash to the power plug or outlet.
4. Don't touch the power outlet with wet hand. Risk of electric shock.

Drainage of Hot Water Tank

1. Remove the power plug from the outlet.
2. Close the water feed valve by turning it anti-clockwise.
3. Press the button on the side of main body.

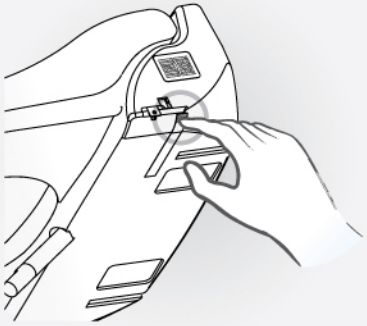

Maintenance during winter season (for freeze protection)

When bidet seat is not used for an extended period of time, either;
Leave unit plugged in and turned on **OR** Unplugged and drain the unit.

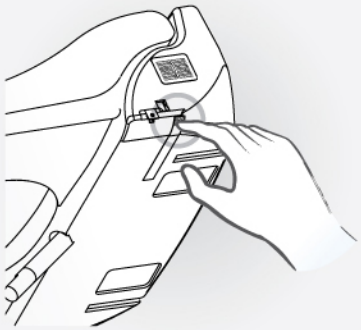

Do not throw away

We are committed to protection the environment.
Please help us by disposing of this product in a responsible way when it reaches the end of its service life, to prevent certain substances contained in electric and electronic products from harming public health or the environment. The symbol means that the products must not be thrown away with other household waste: at the end of its service life, it must be taken at no charge to you to the waste-collection centers provided for the purpose by the authorities in your country.
Or to be distributor from whom you purchase a new product that is equivalent to or that performs the same functions as this product. This latter option may not be available in some countries.

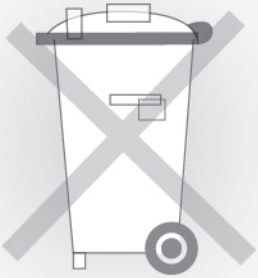

10.Before requesting repair

※ **Please check the following points before requesting the repair of the product.**

Signs to occur	Matters to be checked
Completely out of operation	• Check if the power plug is not connected. • Check the power failure.
Water does not spray out	• Check if the water supply is suspended. • Check if water feed valve is locked • Check if nozzle is blocked by foreign material • Check if connection hose is bent
Water pressure is low	• Check if water pipe filter is blocked by foreign material. • Check if the water pressure is set at too low level
Water is not warm enough	• Check if its temperature is set at 'Off' or 'Low'.
Seat is not warm enough	• Check if its temperature is set at 'Off' or 'Low'
Enema Wash is not operated	• Check if it is set at CHILD mode.

Self-Diagnosis Table

※ **When any abnormal phenomenon occurs, please refer to the following table, and inform the exact status at the time of requesting A/S service. It may relieve our countermeasure.**

No	Self–Diagnosis Phenomenon	Way of Indication
1	Pump motor disconnected or not inserted	WASH, BIDET, ENEMA WASH are our of operation
2	Pump motor short-circuited	
3	Deodorizing motor: Check the cycle of rotation at low speed	Buzzer sounds. Abnormal condition is differently indicated by symptoms
4	Stoppage of motor due to the over-current of deodorization motor	
5	Heat stops in case of low speed rotation of drying motor	
6	Heater and drying motor simultaneously stop in case of the over-current of drying motor.	

11.Product Specifications

Item			HDB –1500R
Rated Voltage			AC 220V~240V , 50Hz
Max. Consumption Power			1670W
Power Cord Length			1.8M
Water Feed Method			Directly Connected to Water Pipe
Water Pressure			0.7~7.5kgf/cm²
Wash	Feeding Volume	Wash	0.7ℓ/min
		Bidet	0.7ℓ/min
		Enema Wash	0.7ℓ/min
	Water Pressure Control		5-Step Control
	Temp. Control		Room Temp. ~ 38℃
	Heater Capa.		1600W
	Safety Device		Temp. Fuse, Thermo Switch
Heated Seat	Temp. Control		Room Temp. ~ 42℃
	Heater Capa.		55W
	Safety Device		Temp. Fuse
Dry	Temp. Control		Room Temp. ~ 50℃
	Heater Capa.		250W
	Safety Device		Temp. Fuse, Bi-metal
Deodorization			Catalytic Deodorization
Product Dimension	elongated		406mm X 528mm X 145mm
	round front		406mm X 496mm X 145mm
Product Weight	elongated		4.7kg (gross packed weight 7.7kg)
	round front		4.5kg (gross packed weight 7.5kg)

12.Comparison Chart

	Division	HDB-1500R
Wash/Dry Function	Wash	●
	Bidet	●
	Enema Wash	●
	Dry	●
	Deodorization	●
	Bubble Wash	●
	Continuous Warm Water Supply	●
Convenient /Comfort Function	Automatic Energy Saving	●
	Learning Energy Saving	●
	Massage	●
	Pulse	●
	Remote control unit	●
	Warm Seat	●
	Soft Lid	●
	Detachable Main Body	●
	Child	●

▪ Dimension diagrams inch (mm)

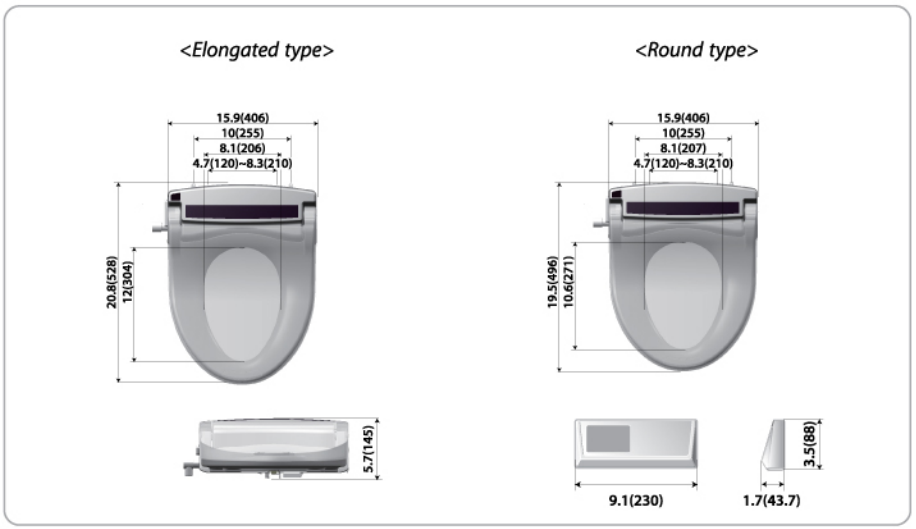

13.Memo

13.Memo

14.WARRANTY INFORMATION

- WARRANTY -

1. We hereby guarantee the product as follow in accordance with the regulation of consumer damage compensation.
2. In case of failure of the product, please inform the distributor where you purchased the product.
3. Product warranty will be effective for 1 year.

Product Name			Warranty Period
Model Name			One (1) year since the date purchased
Date Purchased			
SER. No.			
Customer's Address		Name	
		Tel. No	
Distributor's Address		Name	
		Tel. No.	

Regarding Product Warranty Regulation...

1. We will repair the product at free of charge in case it was failed under the normal operating condition in accordance with the user's guide during the warranty period.
2. Although it is within the warranty period, we will charge the repair service fee etc. (repair + product + travel expense) if it falls under the following cases.

Voiding warranty

1. Defects occurred from the user's careless handling
2. Defects occurred from the usage with incorrect power voltage (E.g., 220V was used to the 110V product.)
3. Defects occurred from the improper repair done by the person other than our service engineer.
4. Defects occurred from Force Majeure (fire, salt, flood, etc.)
5. Failure or damage due to the drop, etc. (user's mis-handling) during the operation after installed
6. Defect occurred from the interior modification at user's discretion
7. In case the life cycle of the part expired

Mail, email or fax the warranty form to :
YOUR LOCAL DEALER FIRST where you bought this appliance

If your dealer is unable to assist you

waco Corp.
B-101, HAGYE-TECHNOTOWN, 10, NOWON-RO 15-GIL,
NOWON-GU, SEOUL, KOREA
TEL:82-2-948-0657 / FAX:82-2-948-2342
www.waco.co.kr